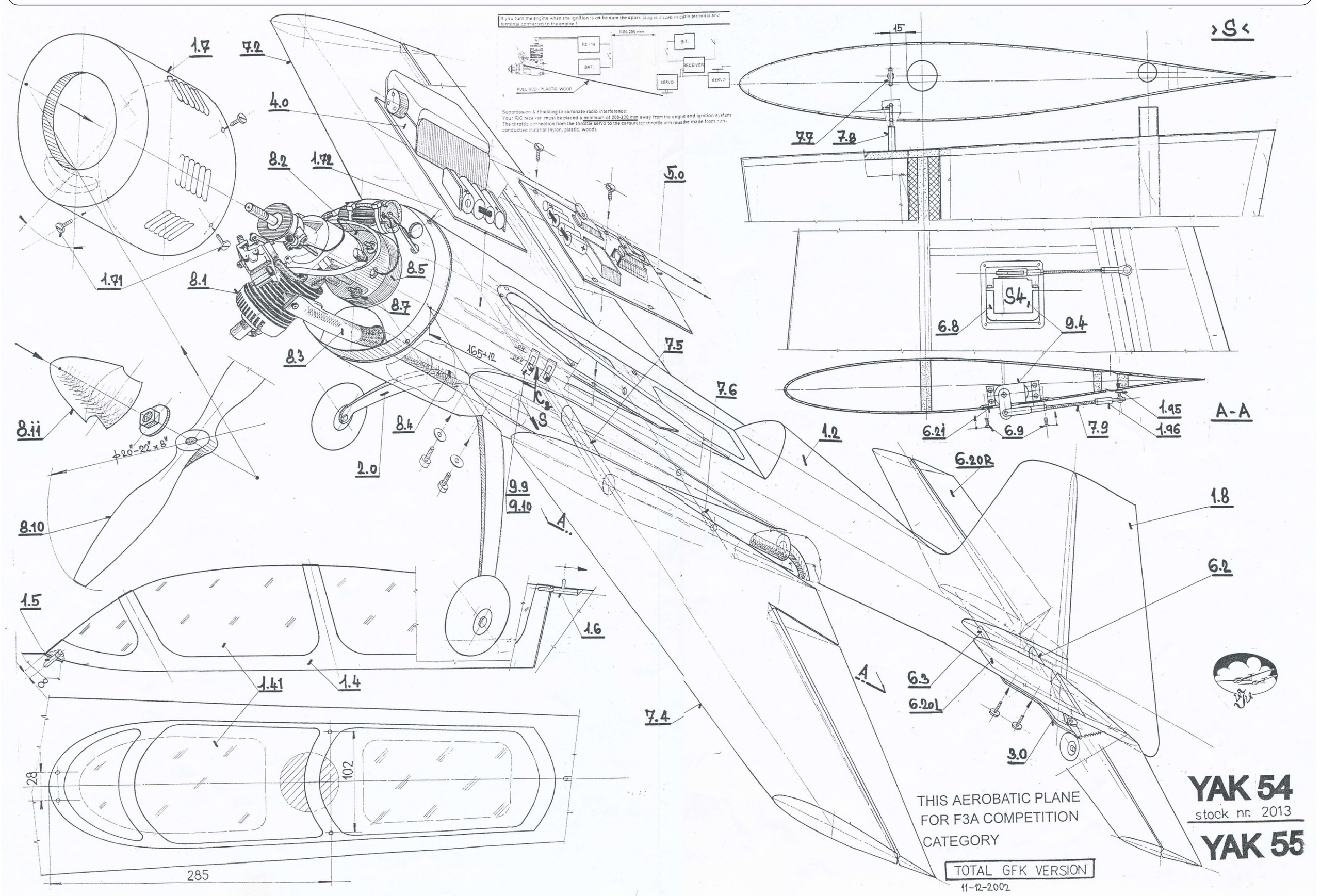
If you turn the engine when the ignition is on be sure the spark plug is placed in cable terminal and terminal connected to the engine !
MIN. 200 mm
PZ - 1a
BAT.
RECEIVER
SERVO
PULL ROD - PLASTIC, WOOD
Suppression & Shielding to eliminate radio interference:
Your R/C receiver must be placed a minimum of 200-300 mm away from the engine and ignition system
The throttle connection from the throttle servo to the carburetor throttle arm musthe made from non-conductive material (nylon, plastic, wood).
1.7
7.2
4.0
8.2
1.72
5.0
1.71
8.1
8.5
8.7
8.3
165+12
7.5
7.6
8.11
8.4
2.0
9.9
9.10
8.10
1.5
1.6
1.41
1.4
28
102
285
15
S
7.7
7.8
S4
6.8
9.4
1.95
1.96
A-A
6.21
6.9
7.9
1.2
6.20R
1.8
6.2
6.3
6.20L
3.0
7.4
THIS AEROBATIC PLANE
FOR F3A COMPETITION
CATEGORY
TOTAL GFK VERSION
11-12-2002
YAK 54
stock nr. 2013
YAK 55

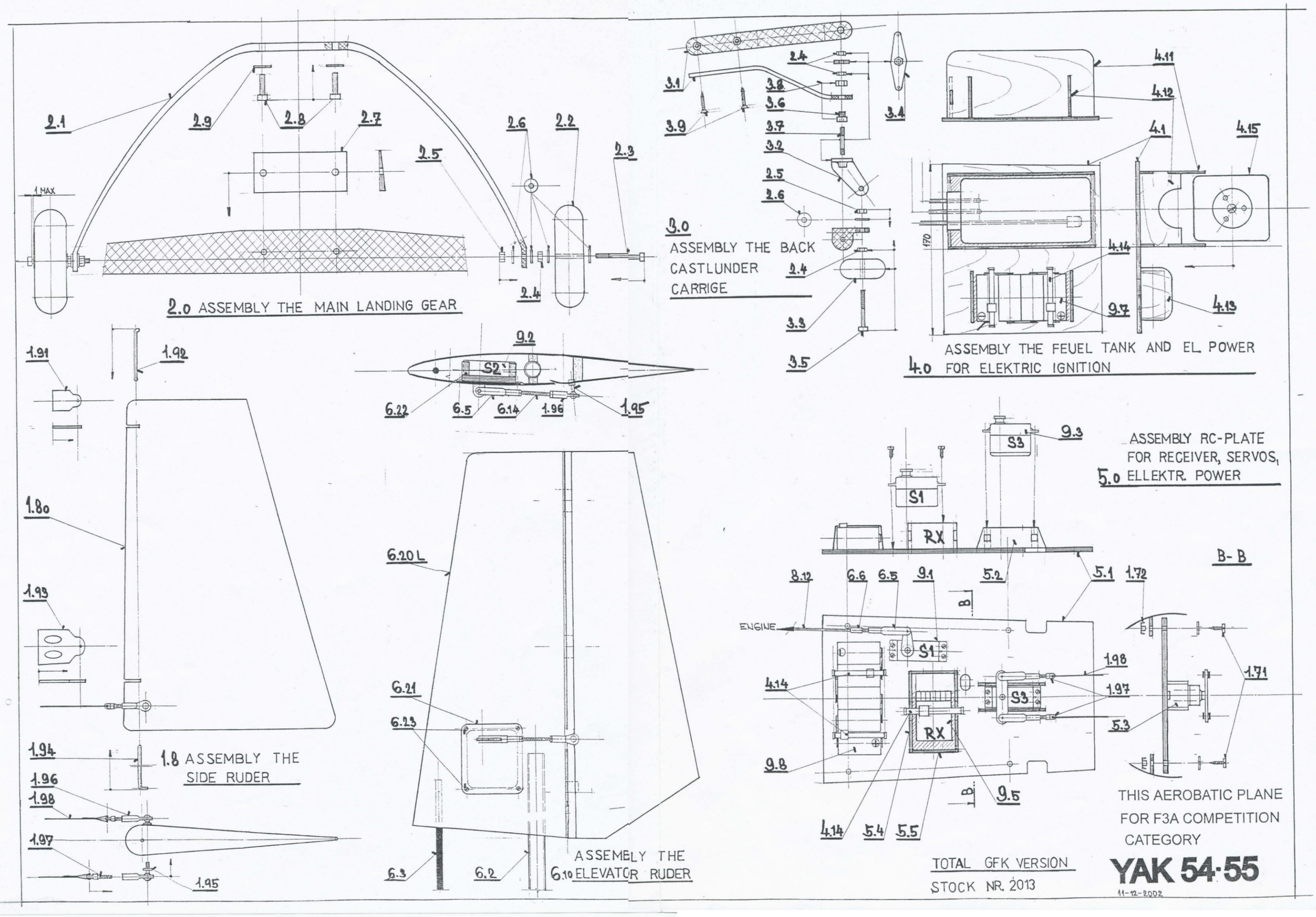
2.1
2.9
2.8
2.7
2.5
2.6
2.2
2.3
2.4
1 MAX
2.0 ASSEMBLY THE MAIN LANDING GEAR
3.1
3.8
3.6
3.9
3.7
3.2
2.5
2.6
3.4
3.0
ASSEMBLY THE BACK
CASTLUNDER
CARRIGE
3.3
3.5
4.11
4.12
4.1
4.15
170
4.14
9.7
4.13
ASSEMBLY THE FEUEL TANK AND EL. POWER
4.0 FOR ELEKTRIC IGNITION
1.91
1.92
9.2
S2
6.22
6.5
6.14
1.96
1.95
1.80
1.93
1.94
1.8 ASSEMBLY THE
SIDE RUDER
1.96
1.98
1.97
1.95
6.20L
6.21
6.23
6.3
6.2
6.10
ASSEMBLY THE
ELEVATOR RUDER
S3
9.3
S1
RX
ASSEMBLY RC-PLATE
FOR RECEIVER, SERVOS,
5.0 ELLEKTR. POWER
B-B
8.12
6.6
6.5
9.1
5.2
5.1
1.72
ENGINE
1.98
1.97
5.3
1.71
4.14
9.8
9.5
5.4
5.5
THIS AEROBATIC PLANE
FOR F3A COMPETITION
CATEGORY
TOTAL GFK VERSION
STOCK NR. 2013
YAK 54·55
11-12-2002